T65.1100

ML

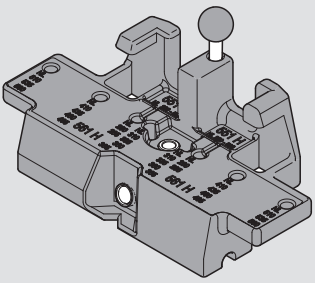

1

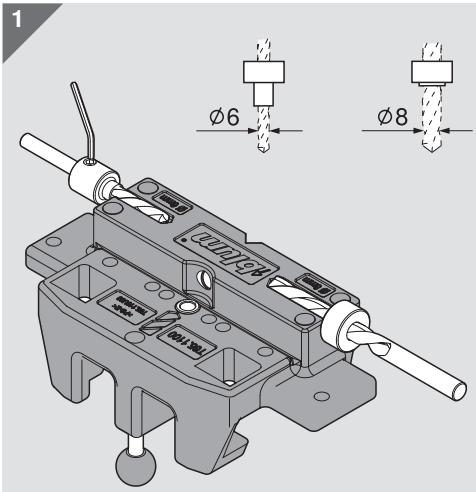

X1

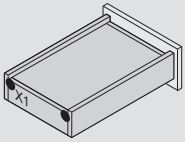

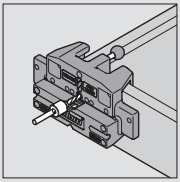

2

X2

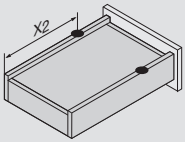

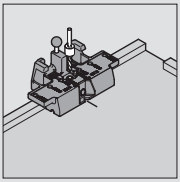

3

X3

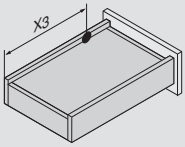

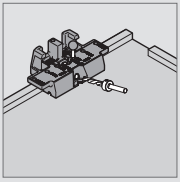

4

X1 TANDEM 551H / 561H

2

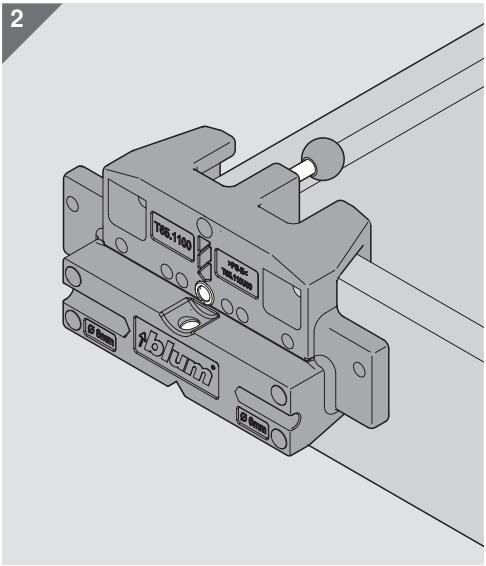

3

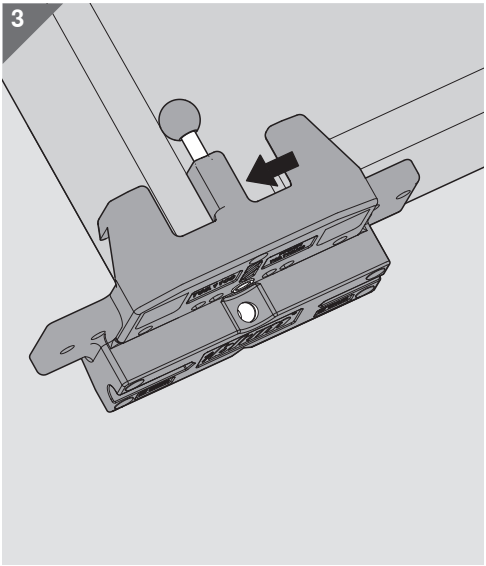

4

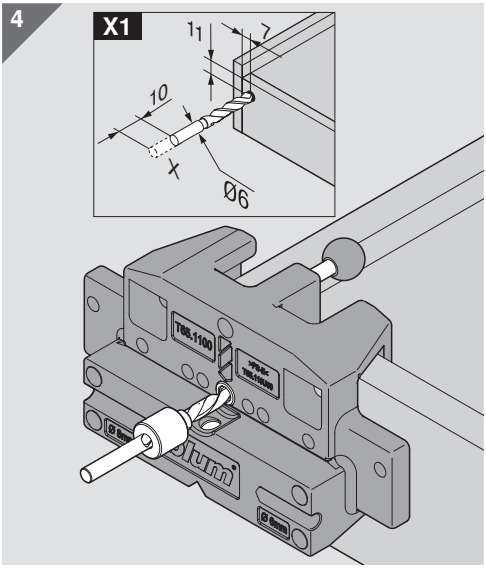

X2 TANDEM 551H / 561H

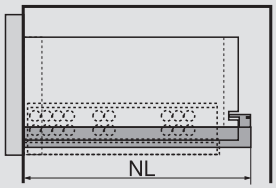

NL (mm)	X2 (mm)
260	205
285	220
310	230
335	245
360	275
385	285
410	300
435	310
460	335
485	350
510	360
535	375
560	405

5

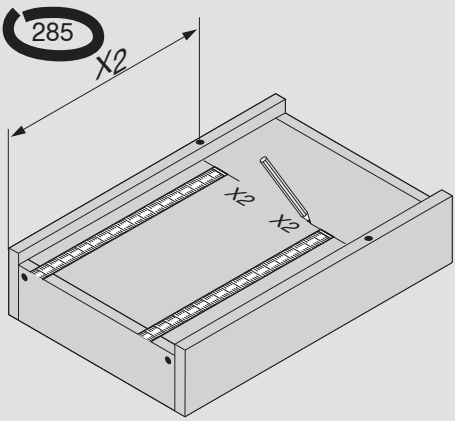

6

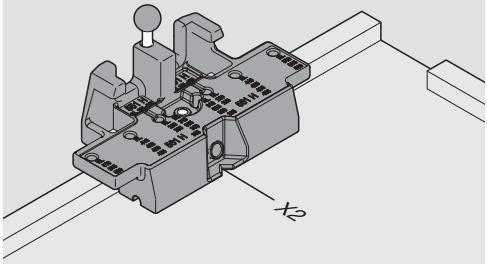

7

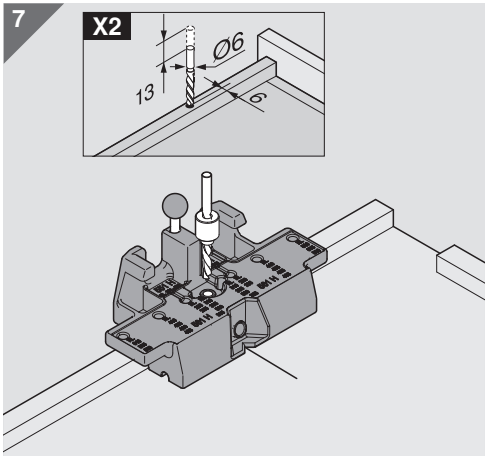

X3 TANDEM 551H

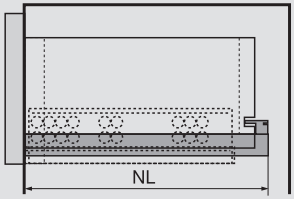

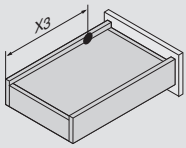

551H →

NL (mm)	X2 (mm)	X3 (mm)
260	205	185
285	220	200
310	230	210
335	245	225
360	275	255
385	285	265
410	300	280
435	310	290
460	335	315
485	350	330
510	360	340
535	375	355
560	405	385

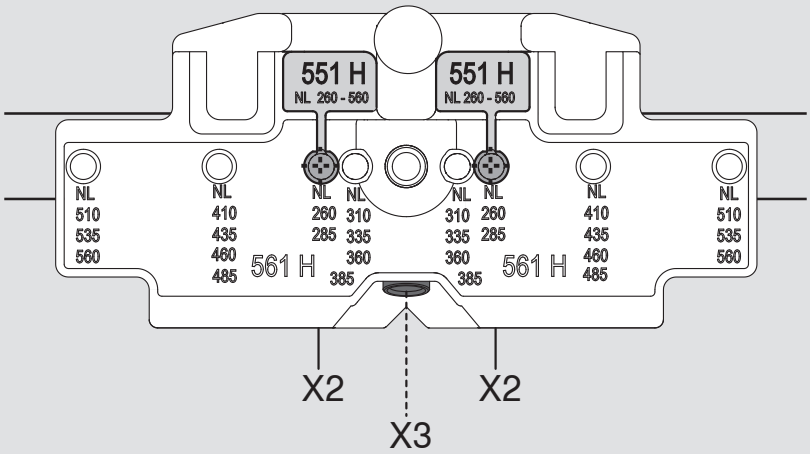

6

X3 TANDEM 561H

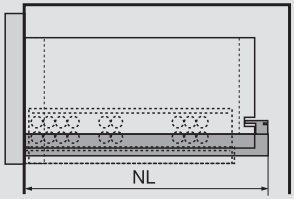

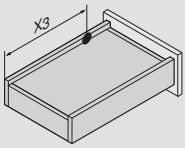

561H →

NL (mm)	X2 (mm)	X3 (mm)
260	205	185
285	220	200
310	230	242
335	245	257
360	275	287
385	285	297
410	300	344
435	310	354
460	335	379
485	350	394
510	360	436
535	375	451
560	405	481

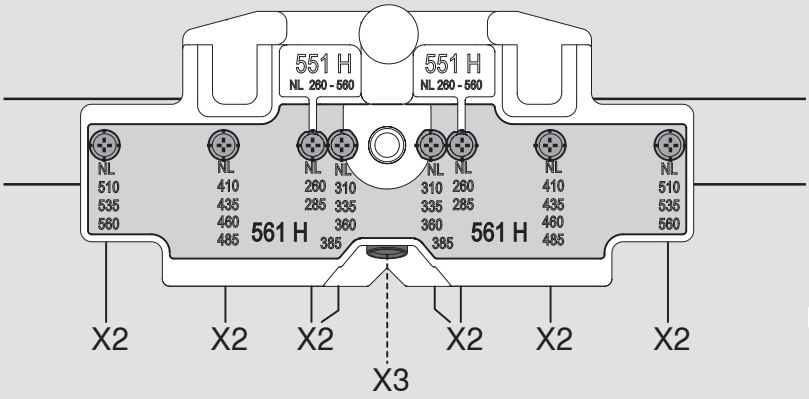

6

X3 TANDEM 551H / 561H

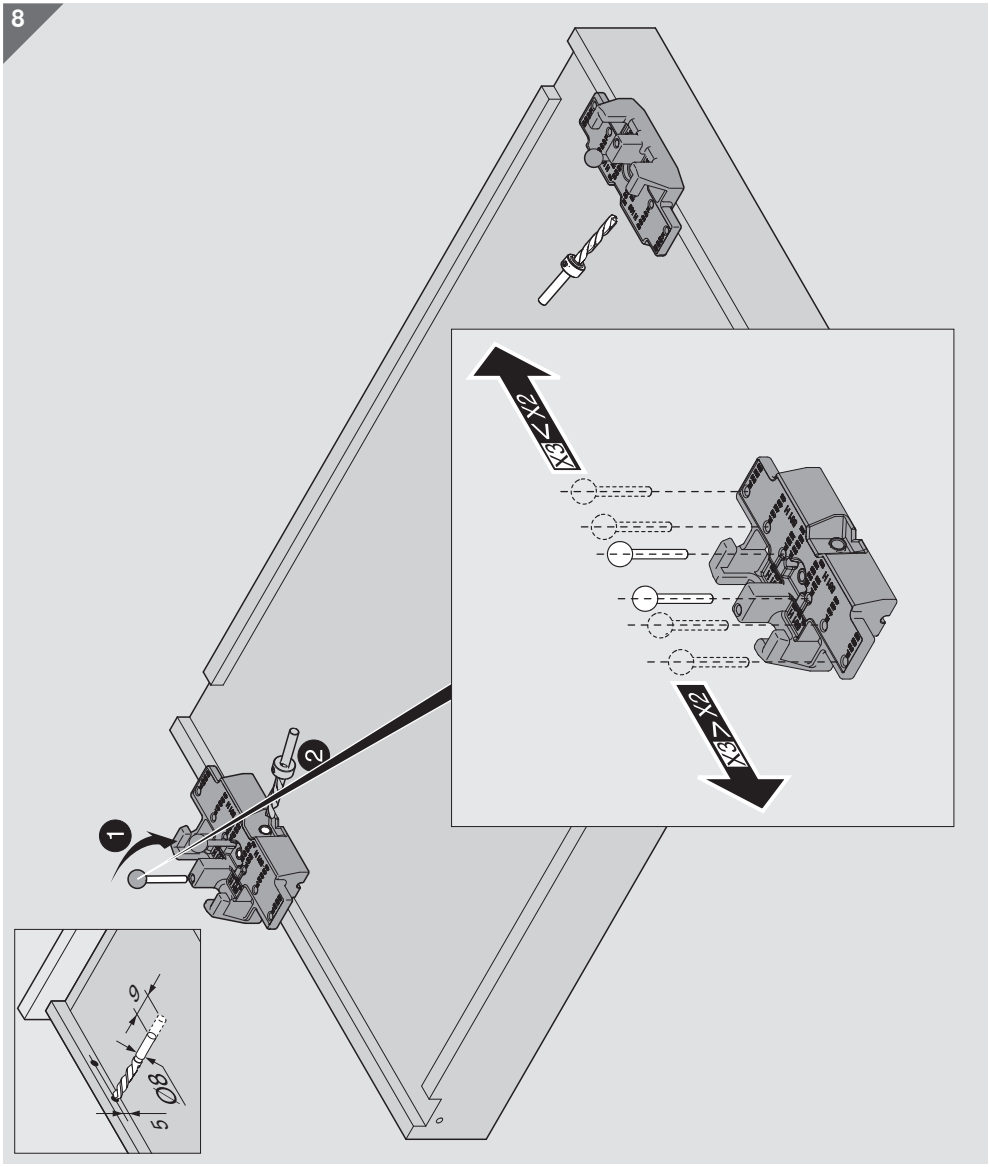

spare parts / Ersatzteile / pièces de rechange / pezzi di ricambio / peças de reposição

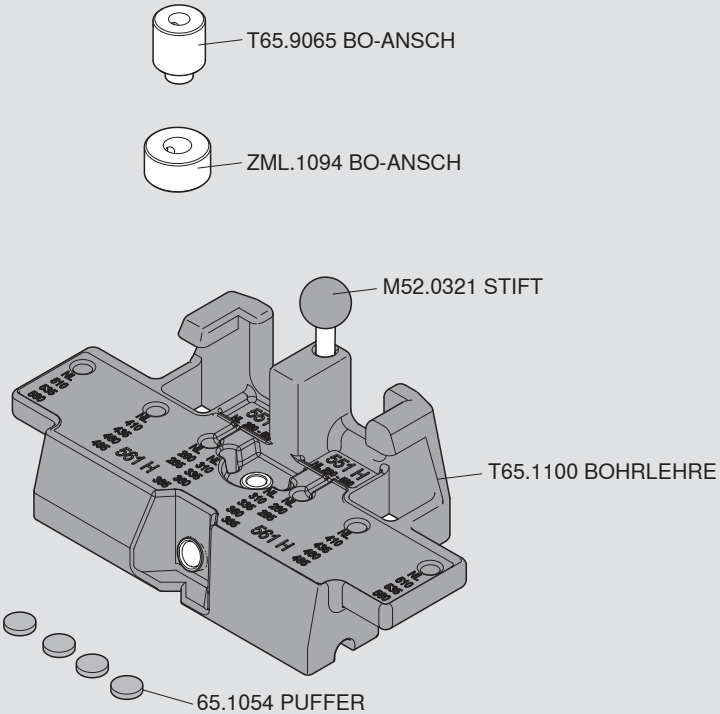

ISO 9001 Certified Quality System

ISO 14001 Certified Environmental System

ISO 50001 Certified Energy System

BAU0022124108 · IDX: 01 · IDNR: 187.192.6 · BA-097/0ML · 12.16 · © Copyright by Blum

Julius Blum GmbH
Beschlägefabrik
6973 Höchst, Austria
Tel.: +43 5578 705-0
Fax: +43 5578 705-44
E-Mail: info@blum.com
www.blum.com

blum®